— Project —

Dual-Point Machinery Condition Monitoring Using Triaxial Vibration Sensing and Global Shutter Vision

Team Leader:YE Bingli
Team Members: ZHANG Zhanshuo, GAN Yunxuan, HE Xinhao, ZHANG Jiaxin, YANG Zhe, YANG Xuanzhi

Topic Introduction

This project addresses the typical industrial problem of operating condition monitoring for mechanical equipment. During long-term operation, equipment such as rotating machinery, machine tools, engines and bearings may exhibit changes in vibration characteristics due to imbalance, looseness, wear, insufficient lubrication or varying operating conditions. Failure to identify anomalies in a timely manner can easily lead to unplanned downtime, increased maintenance costs, production interruptions, and even safety accidents. Therefore, identifying the operating status of equipment based on vibration information is one of the core issues in predictive maintenance and intelligent operation and maintenance.

Research Schedule

Thesis proposal, preliminary system scheme

Prototype code, data acquisition scheme, phased data

Mid-term presentation, experimental results

Final project report, defense PPT, demonstration system

- **Investigation & Proposal**

Preliminary research and scheme design finished.

- **Mid-term Implementation**

Hardware procurement, dual-point coding, data collection, baseline modeling.

- **Later-stage Integration**

Incremental update, system test, result analysis, final report preparation.

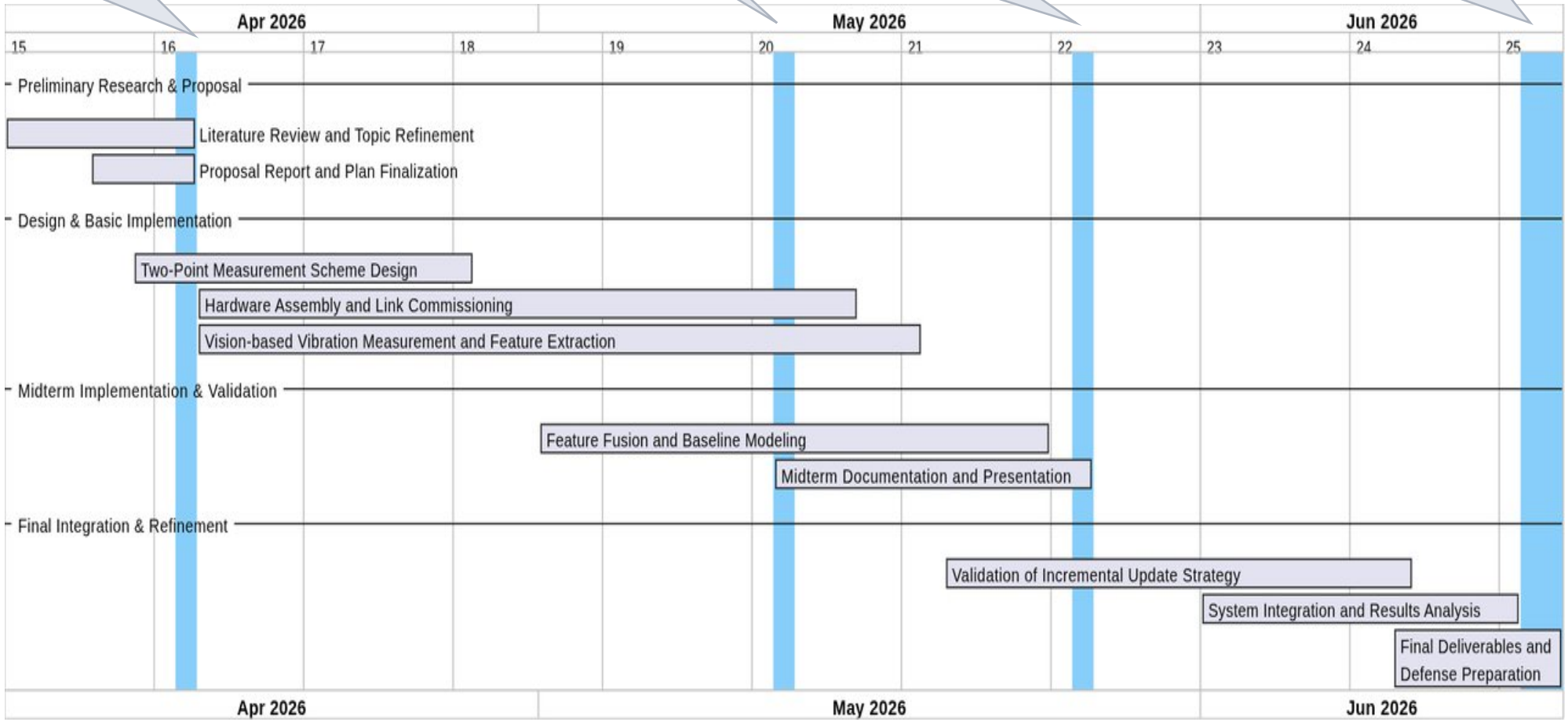

Research Objectives

Object	Corresponding achievements
Build a dual-measurement point monitoring link	Complete the prototype of "three-axis sensor + global camera" acquisition and synchronous analysis
Establish the main link for visual vibration measurement	Output the ROI corner point trajectory, median displacement timing, and visual features such as the sliding window main frequency, power, spectral centroid, and spectral entropy
Implement the state recognition model	Complete the single-modal baseline and dual-modal fusion classification experiments
Verify the incremental update capability	Complete prototype updates or lightweight online update demonstrations based on a small number of new samples
Complete the course delivery	Form the materials for the proposal, mid-term and conclusion, as well as a demonstrable system

Research Ideas

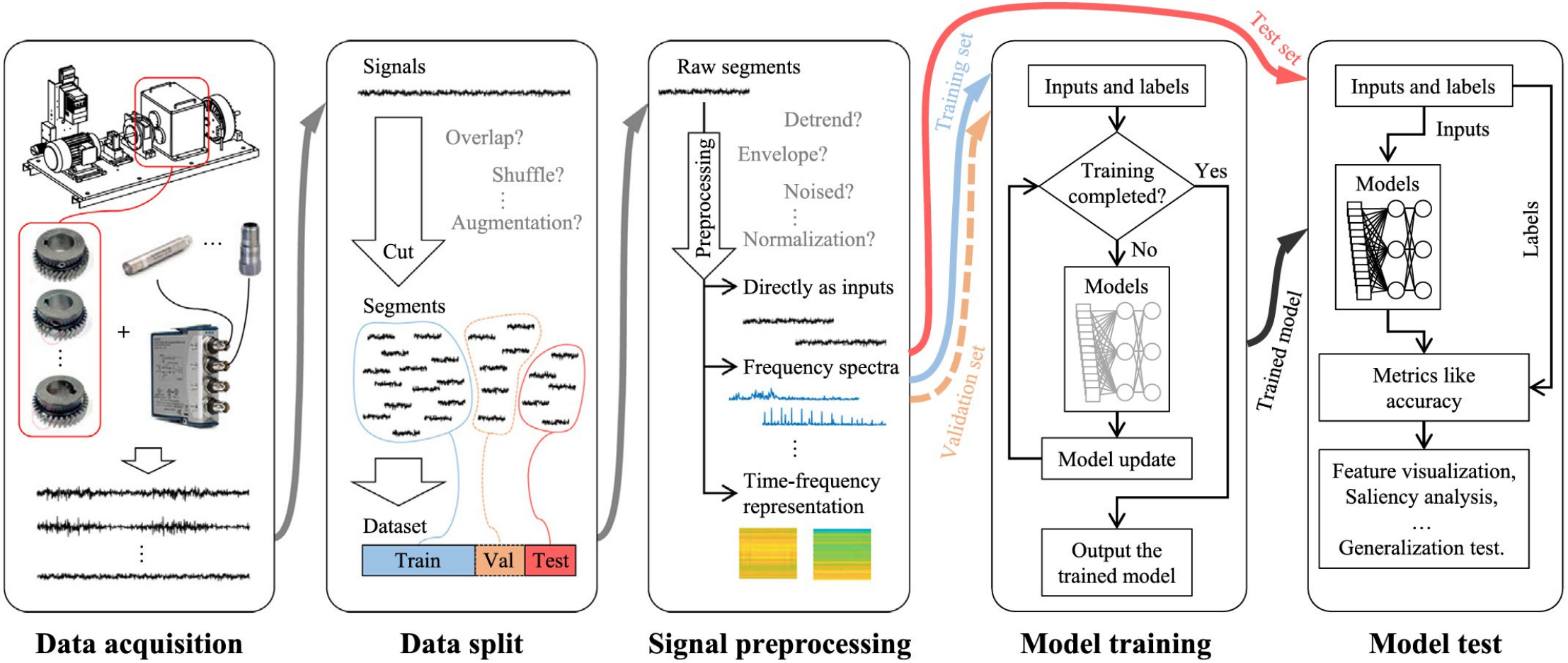

Research Ideas

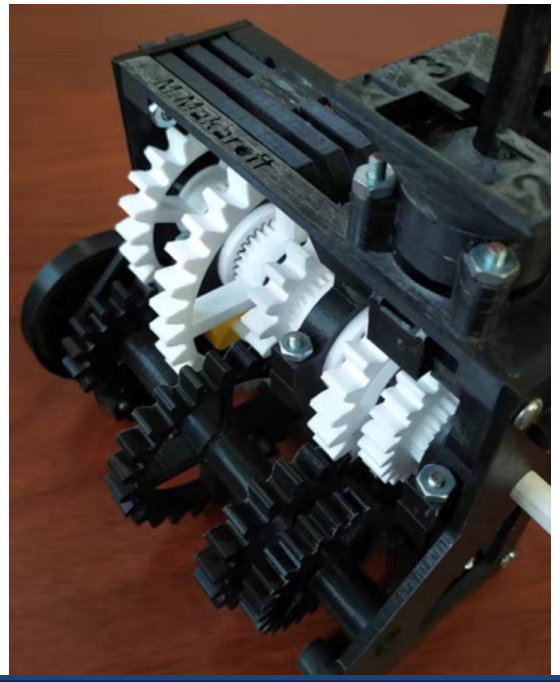

Gearbox Model

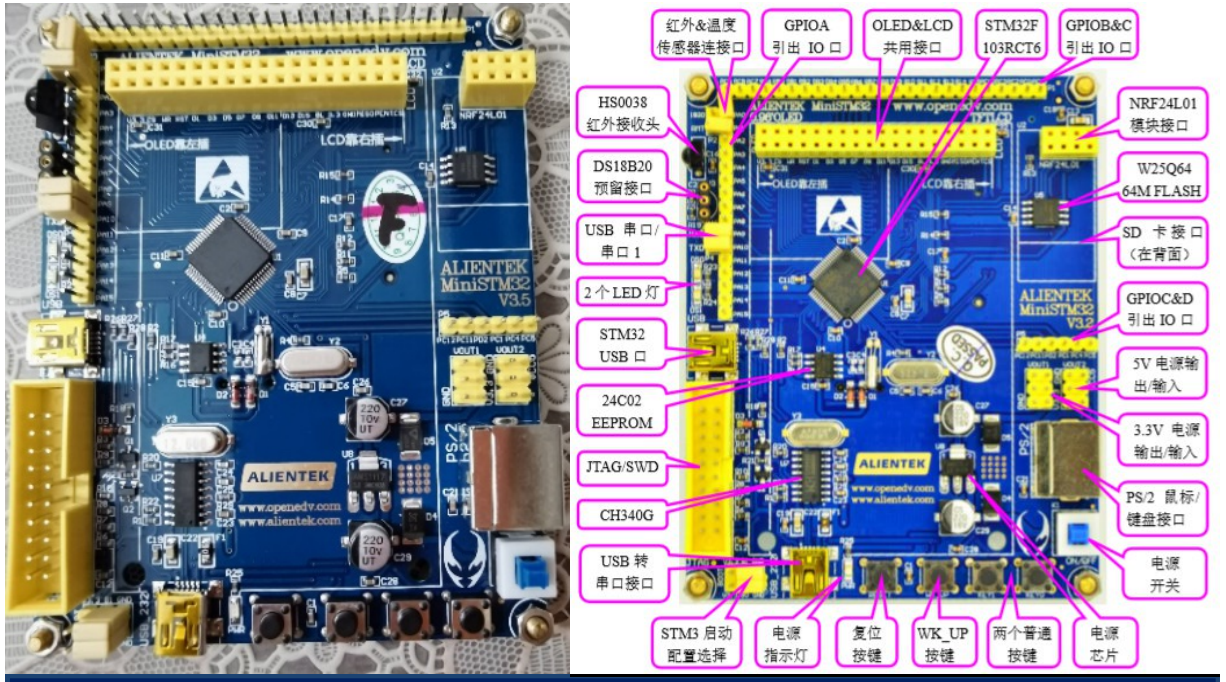

STM32

Proposed Scheme

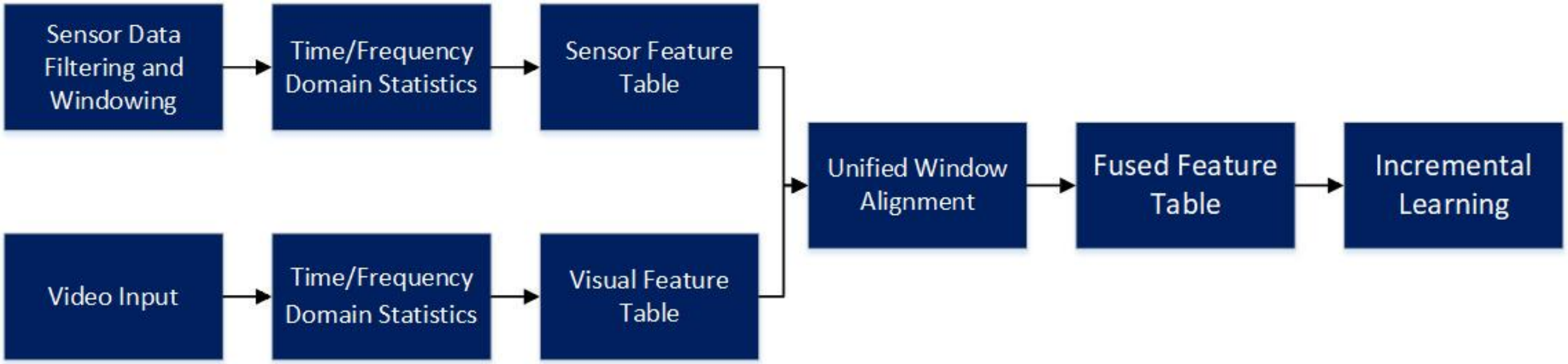

Proposed Scheme

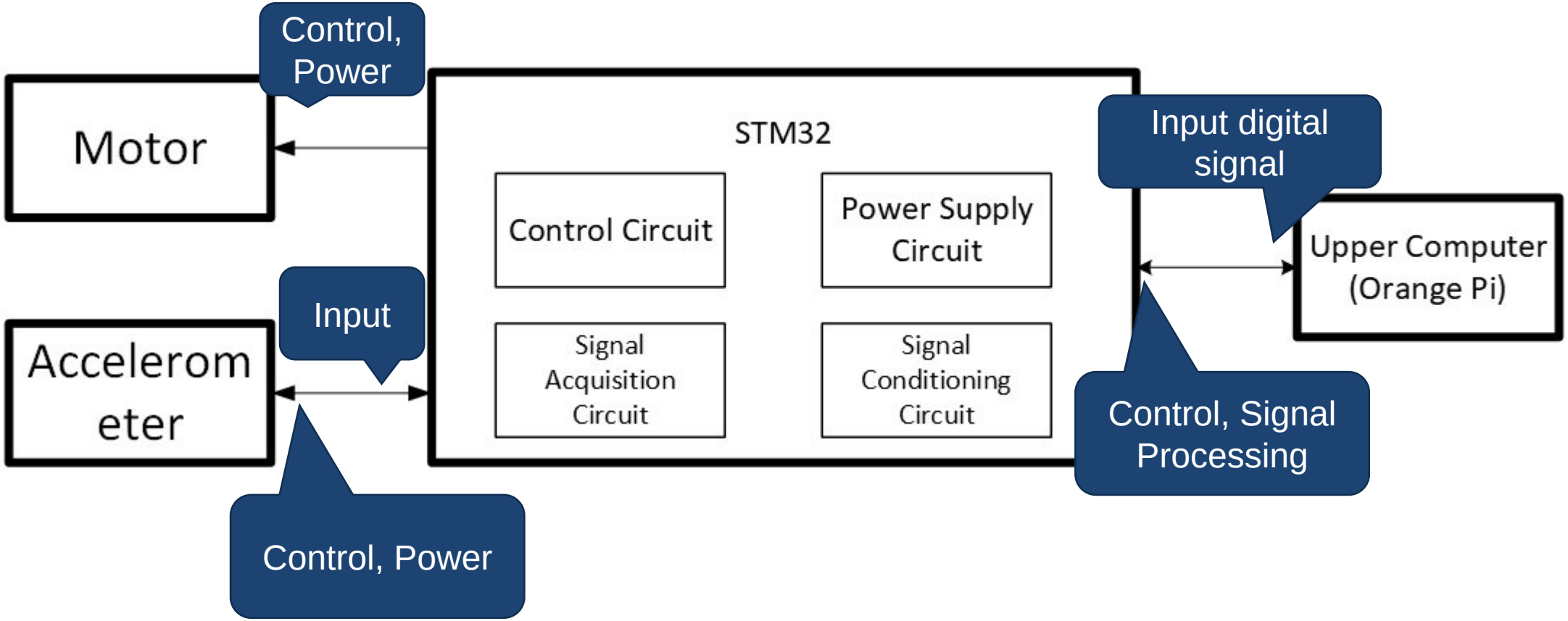

Feasibility Analysis

Dimension	Feasibility Description	Current Risks	Countermeasures
Visual Vibration Sensing	Corner tracking – displacement reconstruction – sliding-window Welch features" pipeline is in place, with a clear structure for structured-feature output	Significantly affected by lighting, texture, frame rate, and optical-flow drift	Select a stable ROI with sufficient texture and lighting; record the true sampling rate; use multi-point statistics and windowed analysis to suppress anomalies
Fusion Recognition	Feature engineering + classical machine learning is well-suited for a small-sample course project	Dual-modal synchronization and label management are complex	Adopt a unified time window and sample-ID management
Incremental Update	Low implementation barrier for prototype updates and lightweight online learning	Instability when samples for new operating conditions are too few	Start with demo-level validation, then restrict the range of operating conditions
Resources	Mechanical test rig, 3-axis accelerometer, global-shutter camera, STM32, Orange Pi / host PC, and standard dev environment.	Low	Use mature hardware and open-source algorithm libraries
Timeline	Web, hardware, and algorithm developed in parallel; prototype + staged validation	Complex models may lead to long implementation and training times	Use interpretable, low-cost classical ML with a lightweight incremental-learning scheme

Personnel Division

Name	Task Assignment
YANG Xuanzhi	Model training
GAN Yunxuan	Hardware
YE Bingli	Connecting with teachers, back-end driver, camera data collection
HE Xinhao	Web frontend and backend
YANG Zhe	Hardware
ZHANG Zhanshuo	Visual data processing
ZHANG Jiaxin	Document writing and testing

Budget

No.	Name	Price	Total
1	STM32 Development Board	242RMB	810.95RMB
2	SG90 Servo Module	9.8RMB	
3	MB018 Accelerometer Module	9.8RMB	
4	MB010 Relay Module	9.8RMB	
5	MS6DSV Accelerometer Sensor	26.2RMB	
6	STM32 Minimum System Board	68.6RMB	
7	Motor Gear Kit	27.35RMB	
8	N20 DC Gear Motor	19.5RMB	
9	Motor Model	9.9RMB	
10	USB 3.0 Industrial Global Shutter Camera	388RMB	

Thanks